This Drawing is copyright by Festo Didactic SE Diese Zeichnung ist Eigentum der Festo Didactic SE

Circuit diagrams Schaltungsunterlagen

designation: Bezeichnung:	CP Lab CP Lab
Customer: Kunde:	
Plant identifier Anlagenkennzeichen	S7M6T7 CP Lab S7-1512SP, HMI TP700, SEW+G120 V3
remark: Bemerkung:	V3 (PCB 2017-03)
last Modification: letzte Änderung:	22.03.2017
Print date: Druckdatum:	22.03.2017
Path: Pfad:	J:\P8\Projekte\Festo\24 CP-Lab\V3\CP Lab V3 2017-03-22.elk

Table of contents Inhaltsverzeichnis

Plant Anlage	Location Ort	Page Seite	Page description Seitenbeschreibung	supplementary field Zusatzfeld	Date Datum	Edited by Bearbeit.	x
=S7M6T7		1	Title page/cover sheet Titel- / Deckblatt		22.03.2017		
=S7M6T7		2	Table of contents Inhaltsverzeichnis		22.03.2017		
=S7M6T7		3	Assembly Aufbau		17.03.2017		
=S7M6T7		4	PCB's Rev 2017-03 Platinen Rev 2017-03		17.03.2017		
=S7M6T7		5	assembly PLC Aufbauplan SPS		17.03.2017		
=S7M6T7		6	application - Byte 0 Applikation - Byte 0		17.03.2017		
=S7M6T7		7	PCB - Byte 1 Platine - Byte 1		17.03.2017		
=S7M6T7		8	PCB - Byte 2 Platine - Byte 2		17.03.2017		
=S7M6T7		9	PCB - IO-Link & Ethernet Platine - IO-Link & Ethernet		17.03.2017		
=S7M6T7		10	PCB - IO-Link A Platine - IO-Link A		17.03.2017		
=S7M6T7		11	PCB - IO-Link B Platine - IO-Link B		17.03.2017		
=S7M6T7		12	PCB - IO-Link analog Platine - IO-Link Analog		17.03.2017		
=S7M6T7		13	PCB - motor + encoder Platine - Motor + Inkrementalgeber		17.03.2017		
=S7M6T7		14	controlpanel basic functions & touchpanel Bedienfeld Grundfunktionen & Touchpanel		17.03.2017		
=S7M6T7		15	controlpanel options Bedienfeld Optionen		17.03.2017		
=S7M6T7		16	PLC Overview SPS Übersicht		17.03.2017		
=S7M6T7		17	pneumatic schematic Pneumatikplan		17.03.2017		

This Drawing is copyright by Festo Didactic SE Diese Zeichnung ist Eigentum der Festo Didactic SE

This Drawing is copyright by Festo Didactic SE Diese Zeichnung ist Eigentum der Festo Didactic SE

-UR1

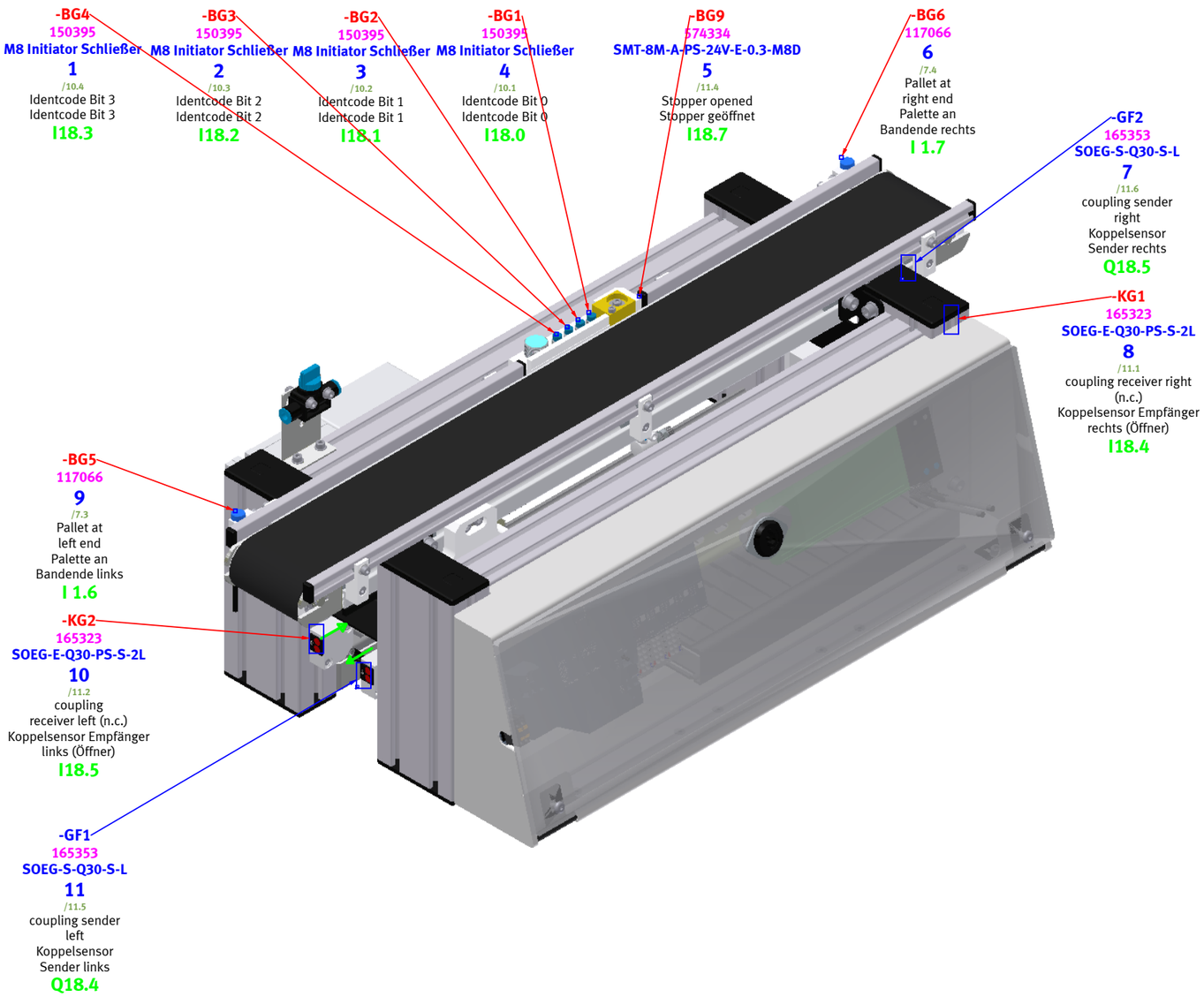

-UR2

-X1 = power supply Stromversorgung
-X2 = Standardbedienung
-X3 = Zusatztasten S1-S4
-X4 = Safety

V3

PCB's Rev 2017-03
Platinen Rev 2017-03

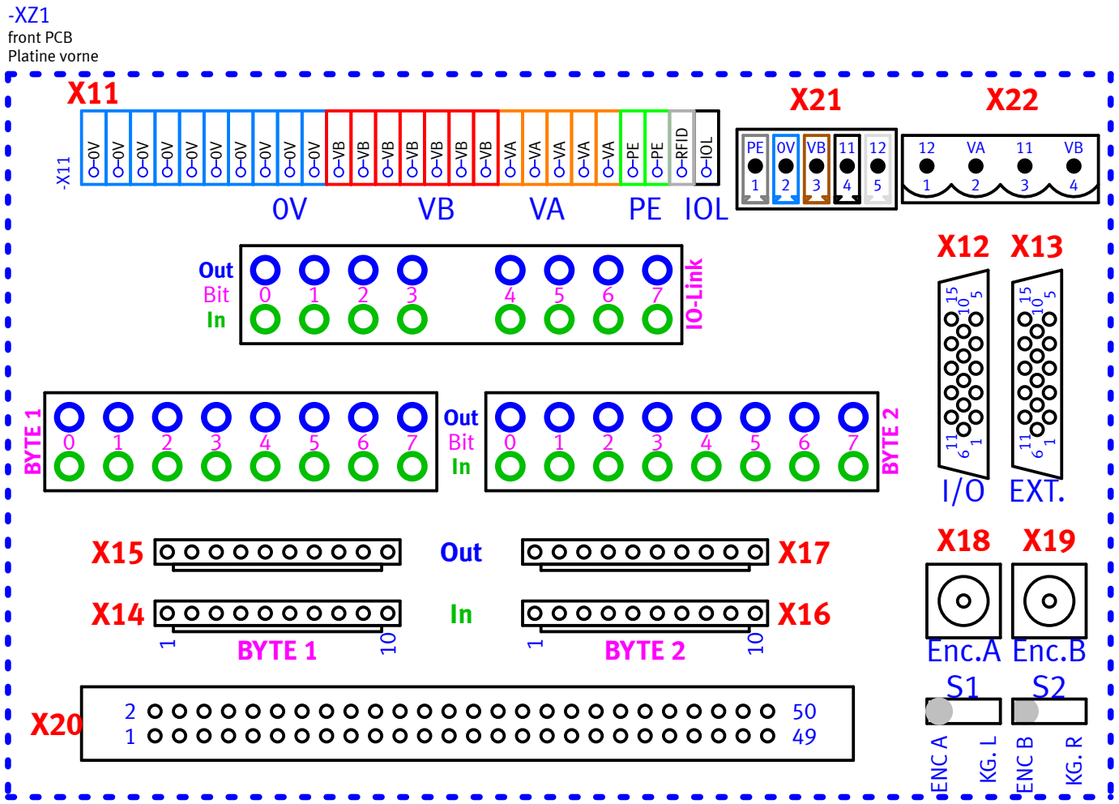

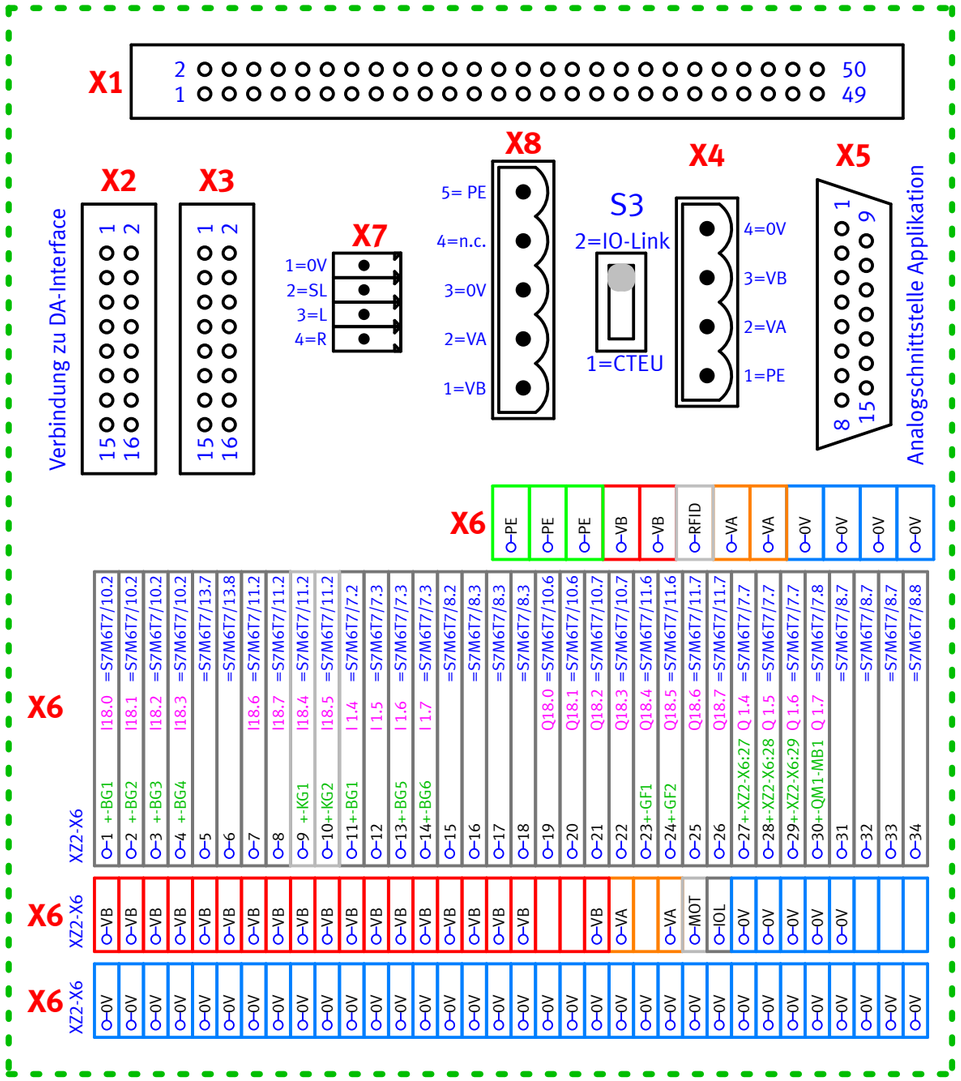

-XZ1-X11 = terminals PCB front side Klemmen Platine vorne
-XZ1-X12 = controlpanel basic functions Bedienfeld Grundfunktionen
-XZ1-X13 = controlpanel additional buttons Bedienfeld Zusatztasten
-XZ1-X14 = Input-Byte 1 Eingangs-Byte 1
-XZ1-X15 = Output-Byte 1 Ausgangs-Byte 1
-XZ1-X16 = Input-Byte 2 Eingangs-Byte 2
-XZ1-X17 = Output-Byte 2 Ausgangs-Byte 2
-XZ1-X18 = incremental encoder BNC-Connector 1 Inkrementalgeber BNC-Anschluss 1
-XZ1-X19 = incremental encoder BNC-Connector 2 Inkrementalgeber BNC-Anschluss 2
-XZ1-X20 = connection to opposite PCB Verbindung zu gegenüberliegender Platine
-XZ1-X21 = Powersupply HMI HMI Stromversorgung
-XZ1-X22 = external Emergency-Stop Connector Not-Halt-Anschluss extern

-XZ1-X1 = connection to opposite PCB Verbindung zu gegenüberliegender Platine
-XZ2-X2 = connection 1 to DA-Interface Verbindung 1 zu DA-Interface
-XZ2-X3 = connection 2 to DA-Interface Verbindung 2 zu DA-Interface
-XZ2-X4 = power supply Stromversorgung
-XZ2-X5 = analog signals for application Analogsignale Applikationsmodul
-XZ2-X6 = terminals PCB rear side Klemmen Platine hinten
-XZ2-X7 = connection to external Motorcontroller Ansteuerung externer Motorregler
-XZ2-X8 = 24V application modules 24V Applikationsmodule

This Drawing is copyright by Festo Didactic SE Diese Zeichnung ist Eigentum der Festo Didactic SE

This Drawing is copyright by Festo Didactic SE Diese Zeichnung ist Eigentum der Festo Didactic SE

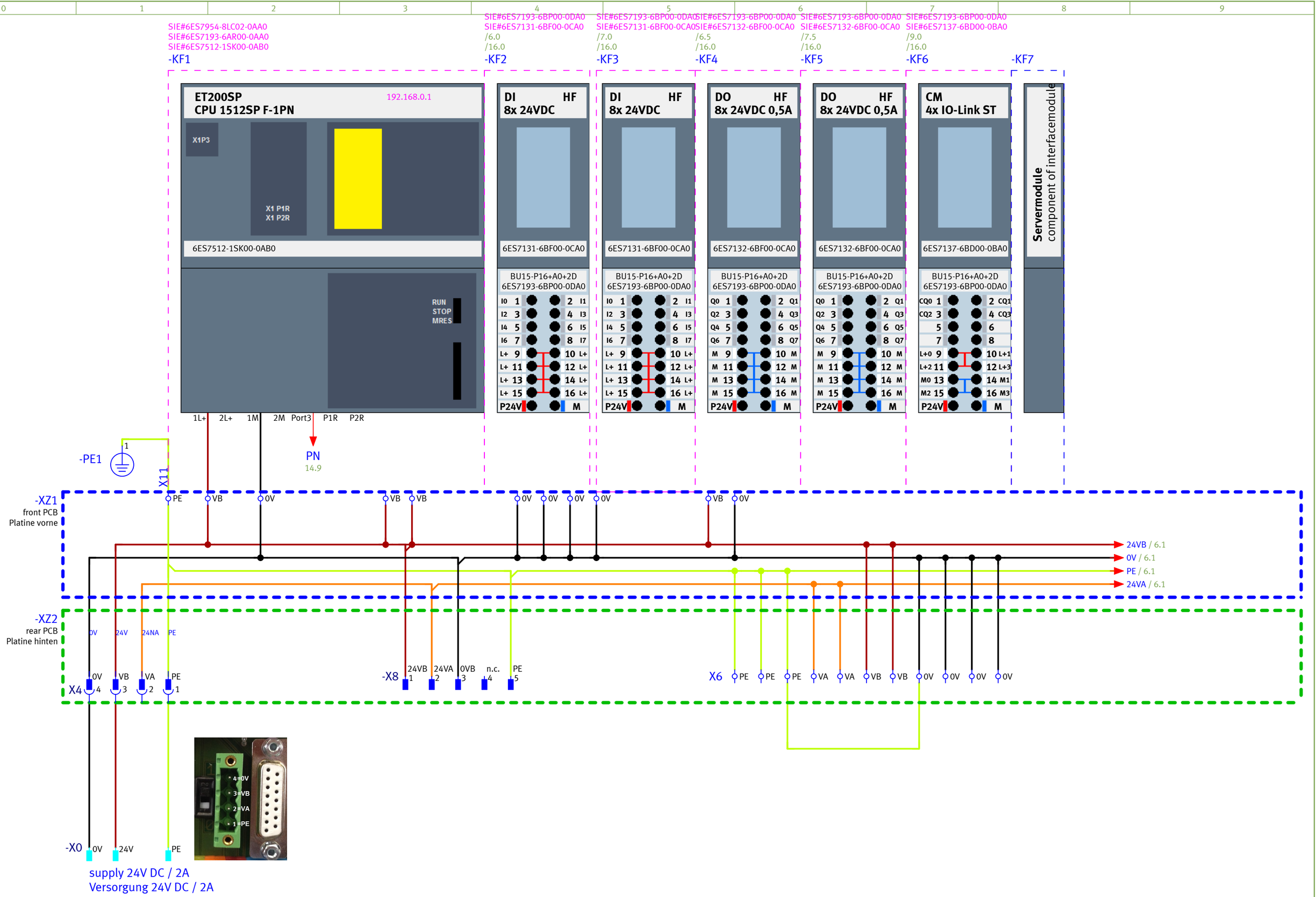

This Drawing is copyright by Festo Didactic SE Diese Zeichnung ist Eigentum der Festo Didactic SE

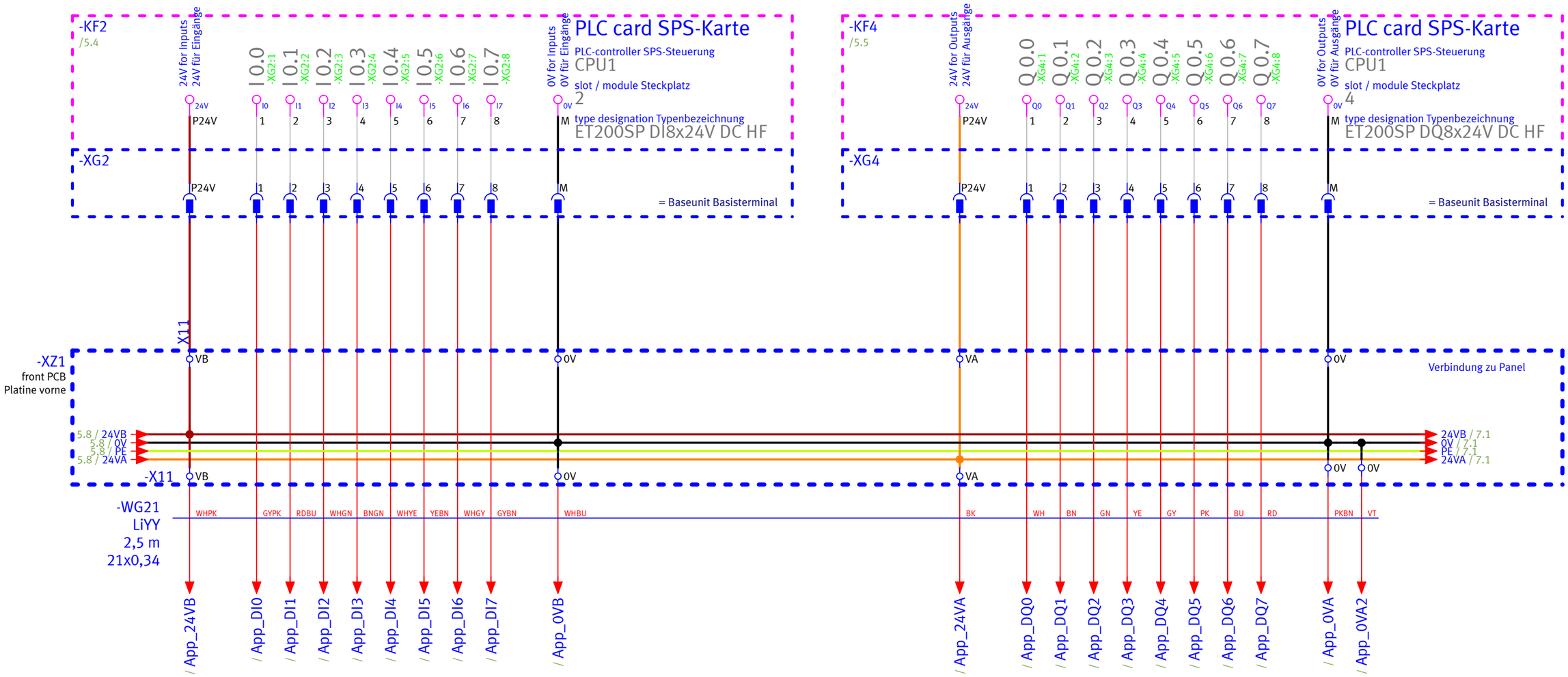

Date	22.03.2017	Festo Didactic SE Rechbergstraße 3 D-73770 Denkendorf	FESTO	application - Byte 0 Applikation - Byte 0	S-Nr.
Ed. by.	ESPE				= S7M6T7 CP Lab S7-1512SP, HMI TP700,
Creat.	ESPE				PSP / DPJ VN ++ Page 6
Drw.No.	N:Raster08 F: WUP0U30238 J:\P8\Projekte\Festo\24 CP-Lab\V3\CP Lab V3 2017-03-22.elk 2.4.4				+ of 17

This Drawing is copyright by Festo Didactic SE Diese Zeichnung ist Eigentum der Festo Didactic SE

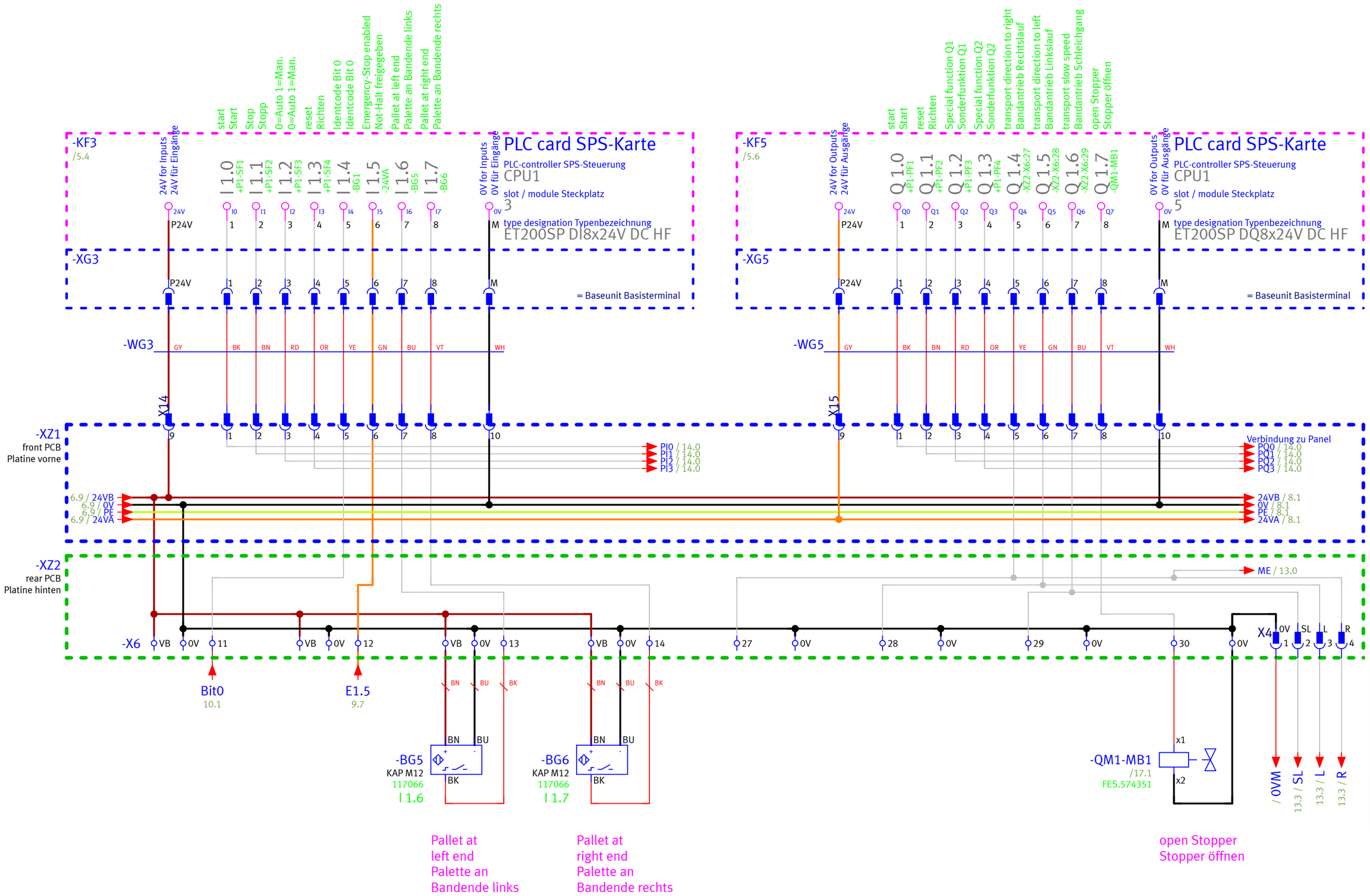

Date	22.03.2017	Festo Didactic SE Rechbergstraße 3 D-73770 Denkendorf	FESTO	PCB - Byte 1 Platine - Byte 1	S-Nr.
Ed. by.	ESPE				PSP / DPJ VN
Creat.	ESPE				
Drw.No.		N:Raster08 F: WUP0U30238 J:\P8\Projekte\Festo\24 CP-Lab\V3\CP Lab V3 2017-03-22.elk 2.4.4			

= S7M6T7 CP Lab S7-1512SP, HMI TP700,
++
+
Page 7
of 17

This Drawing is copyright by Festo Didactic SE Diese Zeichnung ist Eigentum der Festo Didactic SE

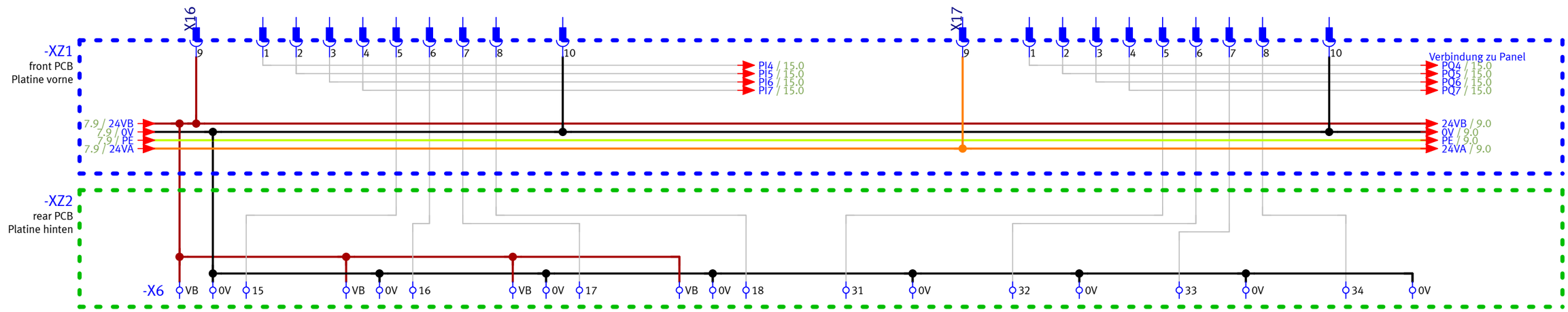

Date	22.03.2017	Festo Didactic SE Rechbergstraße 3 D-73770 Denkendorf	FESTO	PCB - Byte 2 Platine - Byte 2	S-Nr.
Ed. by.	ESPE				= S7M6T7 CP Lab S7-1512SP, HMI TP700,
Creat.	ESPE				PSP / DPJ VN ++ Page 8
Drw.No.		N:Raster08 F: WUP0U30238 J:\P8\Projekte\Festo\24 CP-Lab\V3\CP Lab V3 2017-03-22.elk 2.4.4			+ of 17

PS	Status of the operating voltage supply (power system)
X1,X2	Status of the internal communication ("I-Port Device 1" / "I-Port Device 2")
NF	Network status/network failure (Network Failure)
TP1,TP2	Connection status ("Link1" / "Link2")

IB n+0 = Digital In A+B	QB n+0 = Digital Out A+B
IW n+1 = ADC0 (12 Bit) AI0 (A) 10V=4095	QW n+1= DAC0 (12 Bit) AQ0 (A)
IB n+3 = ADC1 (8 Bit) AI1 (A) 10V=255	QW n+3= DAC1 (12 Bit) AQ0 (B)
IW n+4 = ADC2 (12 Bit) AI0 (B) 10V=4095	
IB n+6 = ADC3 (8 Bit) AI1 (B) 10V=255	V1.0: baudrate=COM3 , minCycle=800
IB n+7 = LoopCounter 0-255	

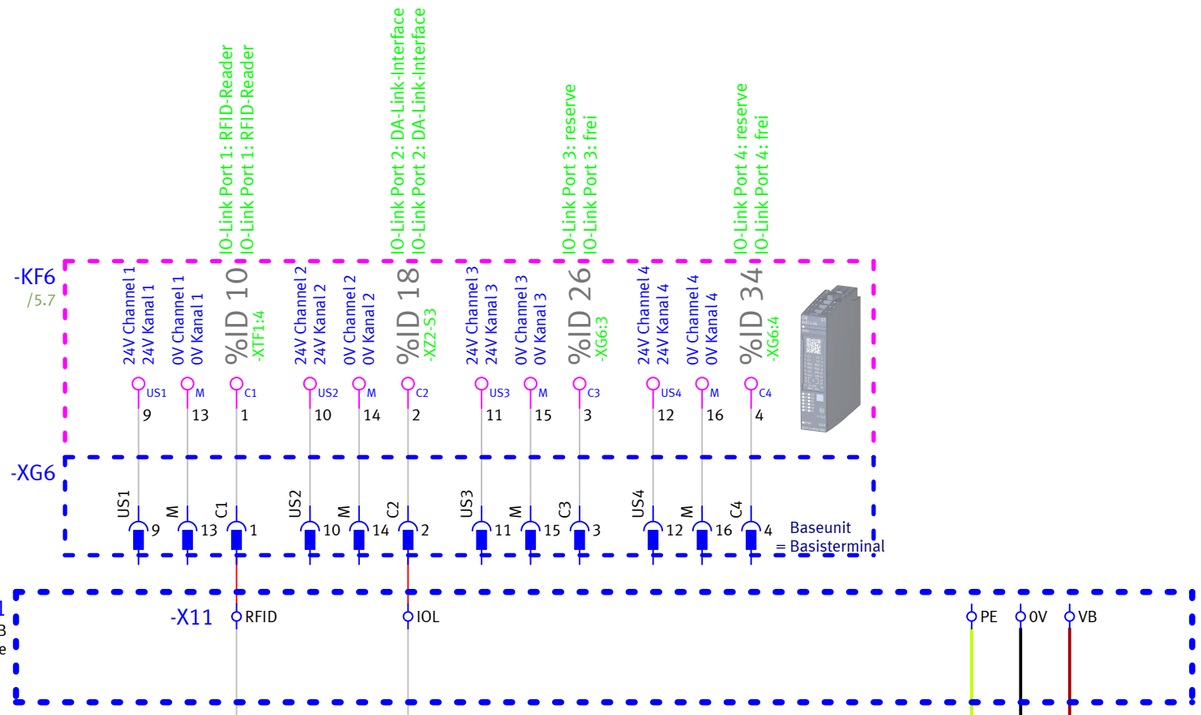

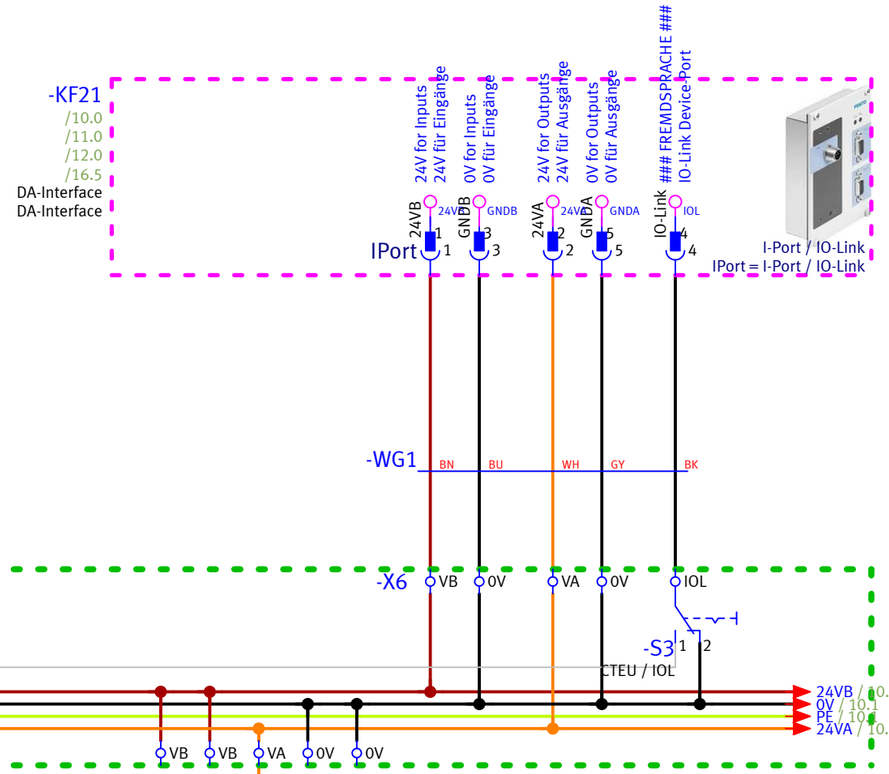

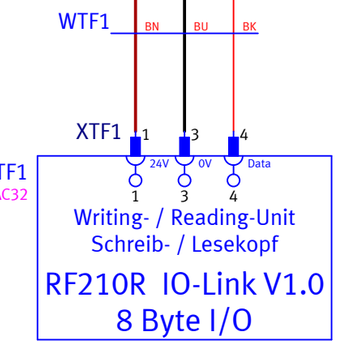

IB n+0: State	State Bit 0: not used
IB n+1: ErrorCode	State Bit 1: Write 4 Byte
IB n+2: Adress-H	State Bit 2: Read 4 Byte
IB n+3: Adress-L	State Bit 3: not used
IB n+4: Data0	State Bit 4: AntOff
IB n+5: Data1	State Bit 5: TagPresent
IB n+6: Data2	State Bit 6: Error
IB n+7: Data3	State Bit 7: Done
QB n+0: Command	Command Bit 0: not used
QB n+1: not used	Command Bit 1: Write 4 Byte
QB n+2: Adress-H	Command Bit 2: Read 4 Byte
QB n+3: Adress-L	Command Bit 3: not used
QB n+4: Data0	Command Bit 4: AntOff
QB n+5: Data1	Command Bit 5: not used
QB n+6: Data2	Command Bit 6: not used
QB n+7: Data3	Command Bit 7: not used

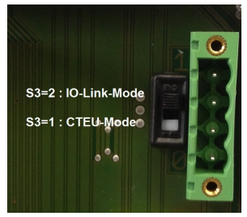

-XTF1 = RFID-Connector RFID-Anschluss

This Drawing is copyright by Festo Didactic SE
Diese Zeichnung ist Eigentum der Festo Didactic SE

This Drawing is copyright by Festo Didactic SE
Diese Zeichnung ist Eigentum der Festo Didactic SE

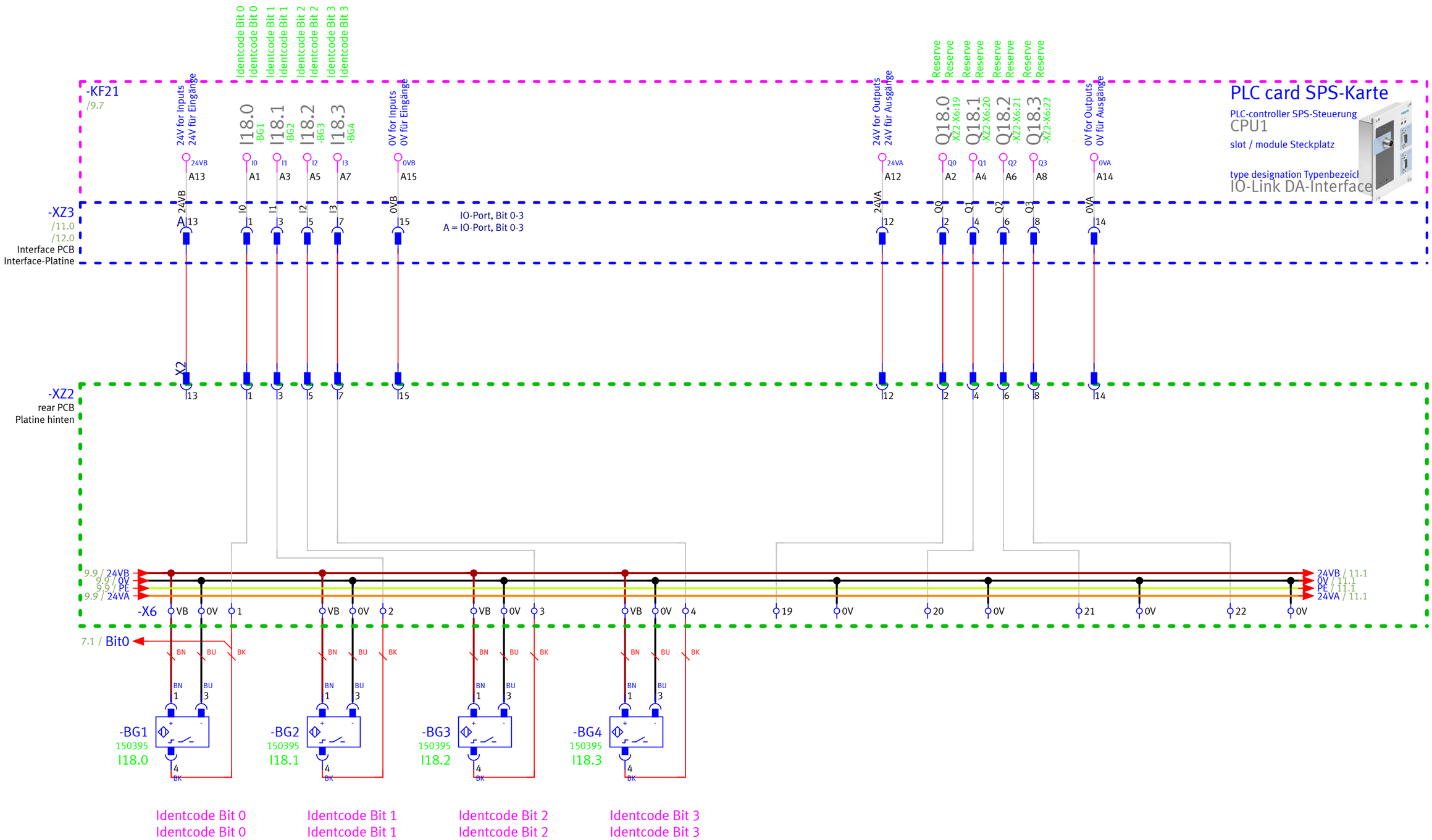

Date	22.03.2017	Festo Didactic SE Rechbergstraße 3 D-73770 Denkendorf	FESTO	PCB - IO-Link A Platine - IO-Link A	S-Nr.
Ed. by.	ESPE				= S7M6T7 CP Lab S7-1512SP, HMI TP700,
Creat.	ESPE				PSP / DPJ VN ++ Page 10
Drw.No.		N:Raster08 F: WUP0U30238 J:\P8\Projekte\Festo\24 CP-Lab\V3\CP Lab V3 2017-03-22.elk 2.4.4			+ of 17

This Drawing is copyright by Festo Didactic SE Diese Zeichnung ist Eigentum der Festo Didactic SE

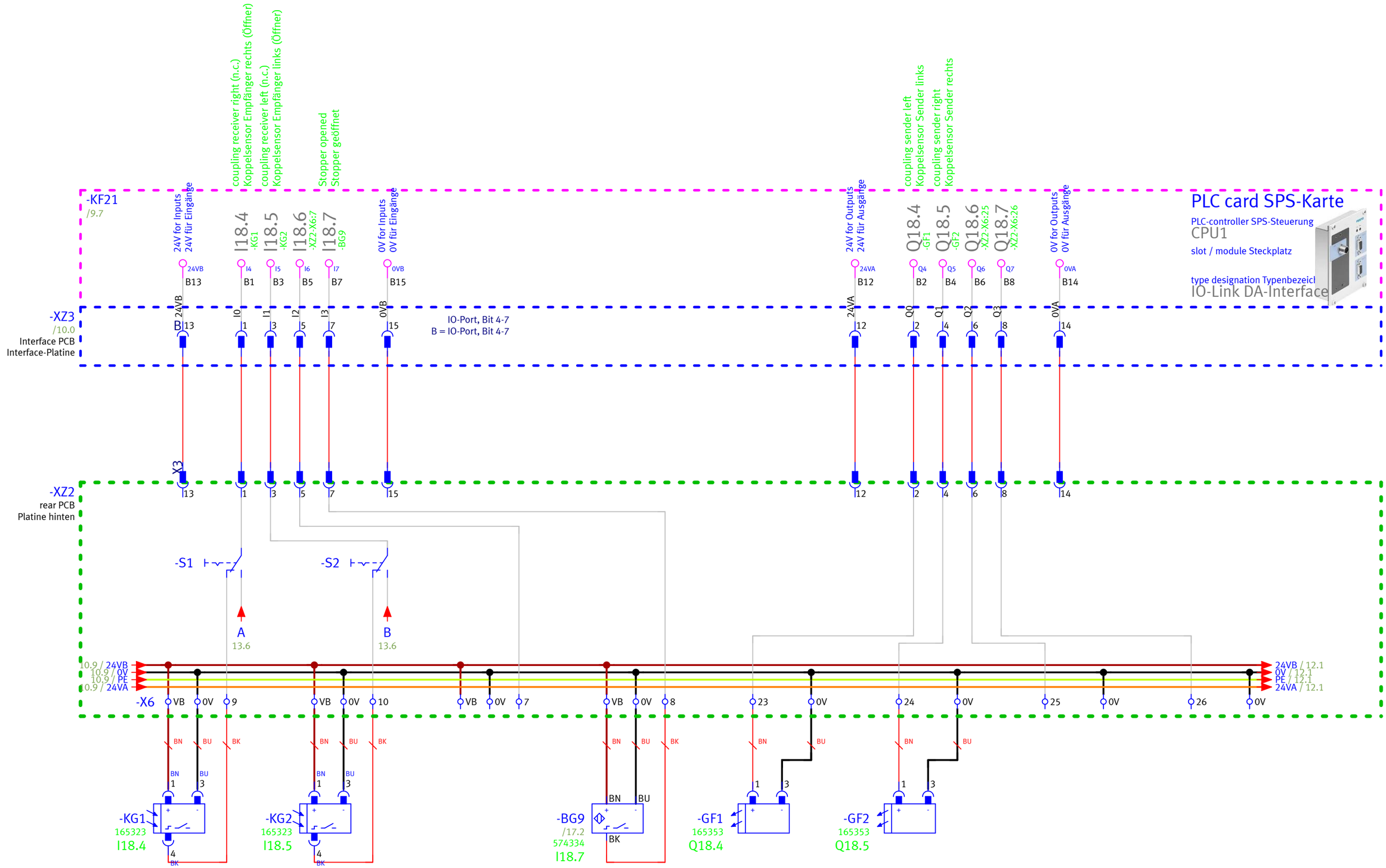

«10
12»

Date	22.03.2017	Festo Didactic SE Rechbergstraße 3 D-73770 Denkendorf	FESTO	PCB - IO-Link B Platine - IO-Link B	S-Nr.
Ed. by.	ESPE				PSP / DPJ VN
Creat.	ESPE				
Drw.No.		N:Raster08 F: WUP0U30238 J:\P8\Projekte\Festo\24 CP-Lab\V3\CP Lab V3 2017-03-22.elk 2.4.4			

= S7M6T7 CP Lab S7-1512SP, HMI TP700,
++
+

This Drawing is copyright by Festo Didactic SE
Diese Zeichnung ist Eigentum der Festo Didactic SE

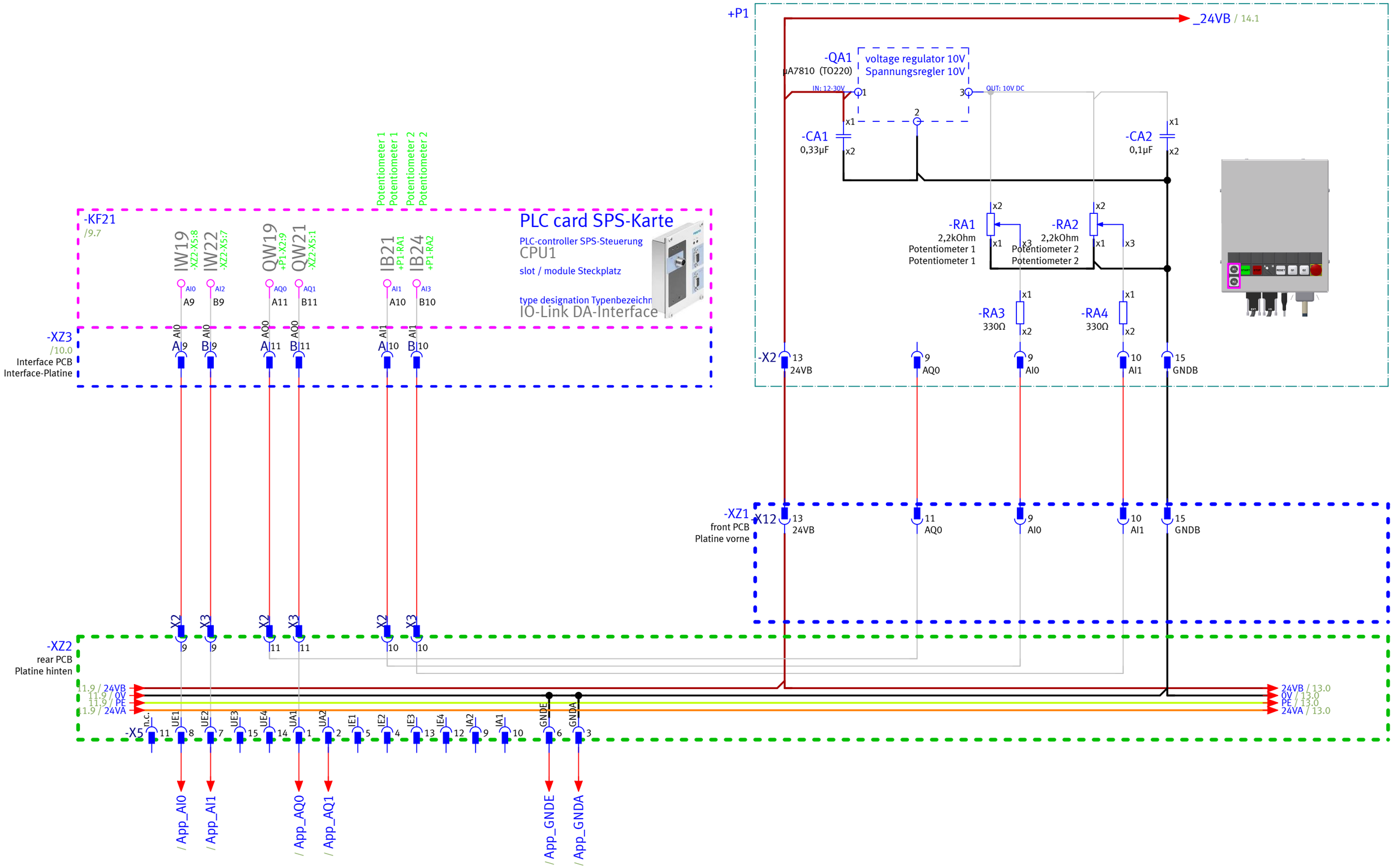

Date	22.03.2017	Festo Didactic SE Rechbergstraße 3 D-73770 Denkendorf	FESTO	PCB - IO-Link analog Platine - IO-Link Analog	S-Nr.
Ed. by.	ESPE				= S7M6T7 CP Lab S7-1512SP, HMI TP700,
Creat.	ESPE				PSP / DPJ VN ++ Page 12
Drw.No.		N:Raster08 F: WUP0U30238 J:\P8\Projekte\Festo\24 CP-Lab\V3\CP Lab V3 2017-03-22.elk 2.4.4			+ of 17

This Drawing is copyright by Festo Didactic SE Diese Zeichnung ist Eigentum der Festo Didactic SE

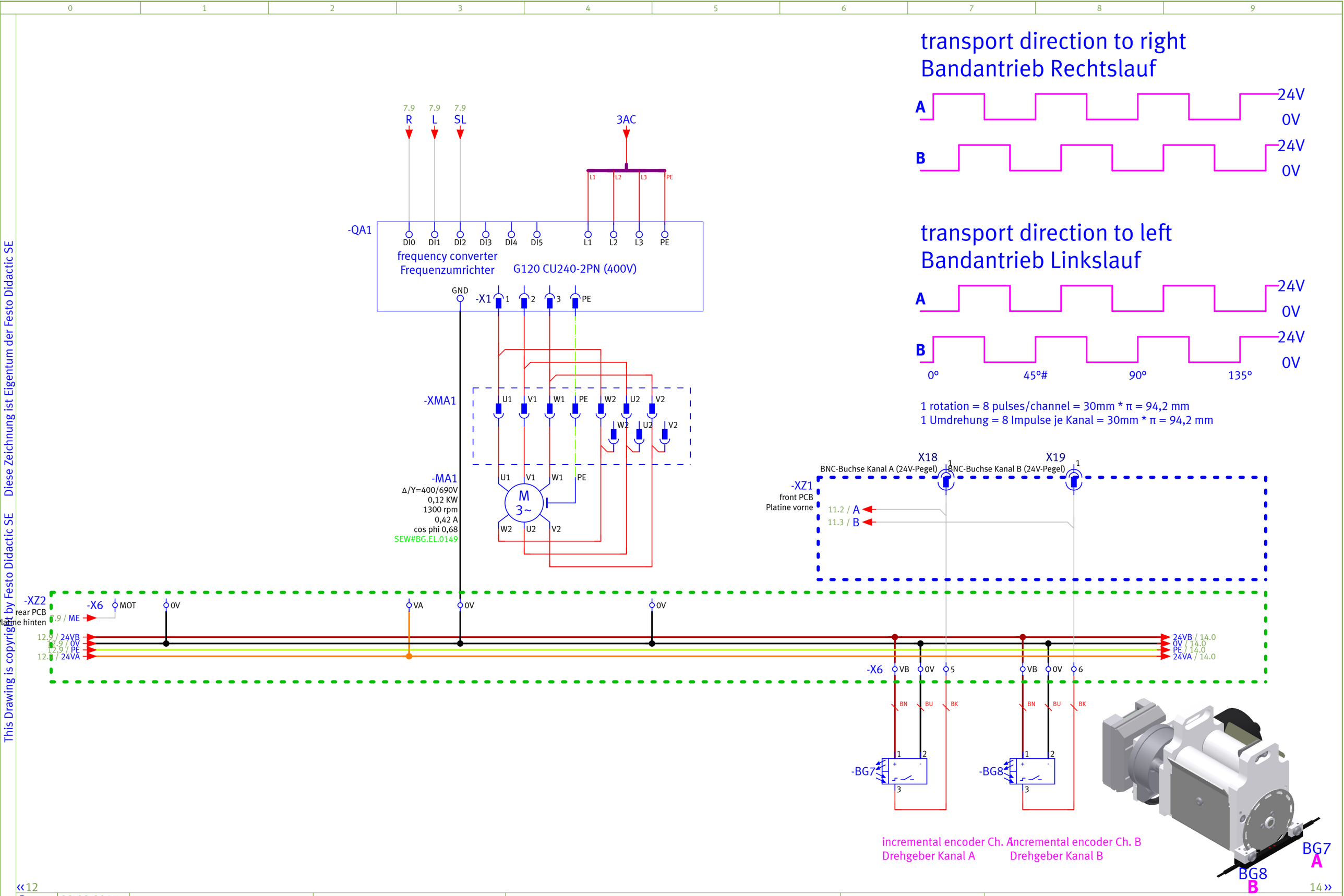

Date	22.03.2017	Festo Didactic SE Rechbergstraße 3 D-73770 Denkendorf	FESTO	PCB - motor + encoder Platine - Motor + Inkrementalgeber	S-Nr.
Ed. by.	ESPE				PSP / DPJ VN
Creat.	ESPE				
Drw.No.		N:Raster08 F: WUP0U30238 J:\P8\Projekte\Festo\24 CP-Lab\V3\CP Lab V3 2017-03-22.elk 2.4.4			

= S7M6T7 CP Lab S7-1512SP, HMI TP700,
++
+
Page 13
of 17

This Drawing is copyright by Festo Didactic SE Diese Zeichnung ist Eigentum der Festo Didactic SE

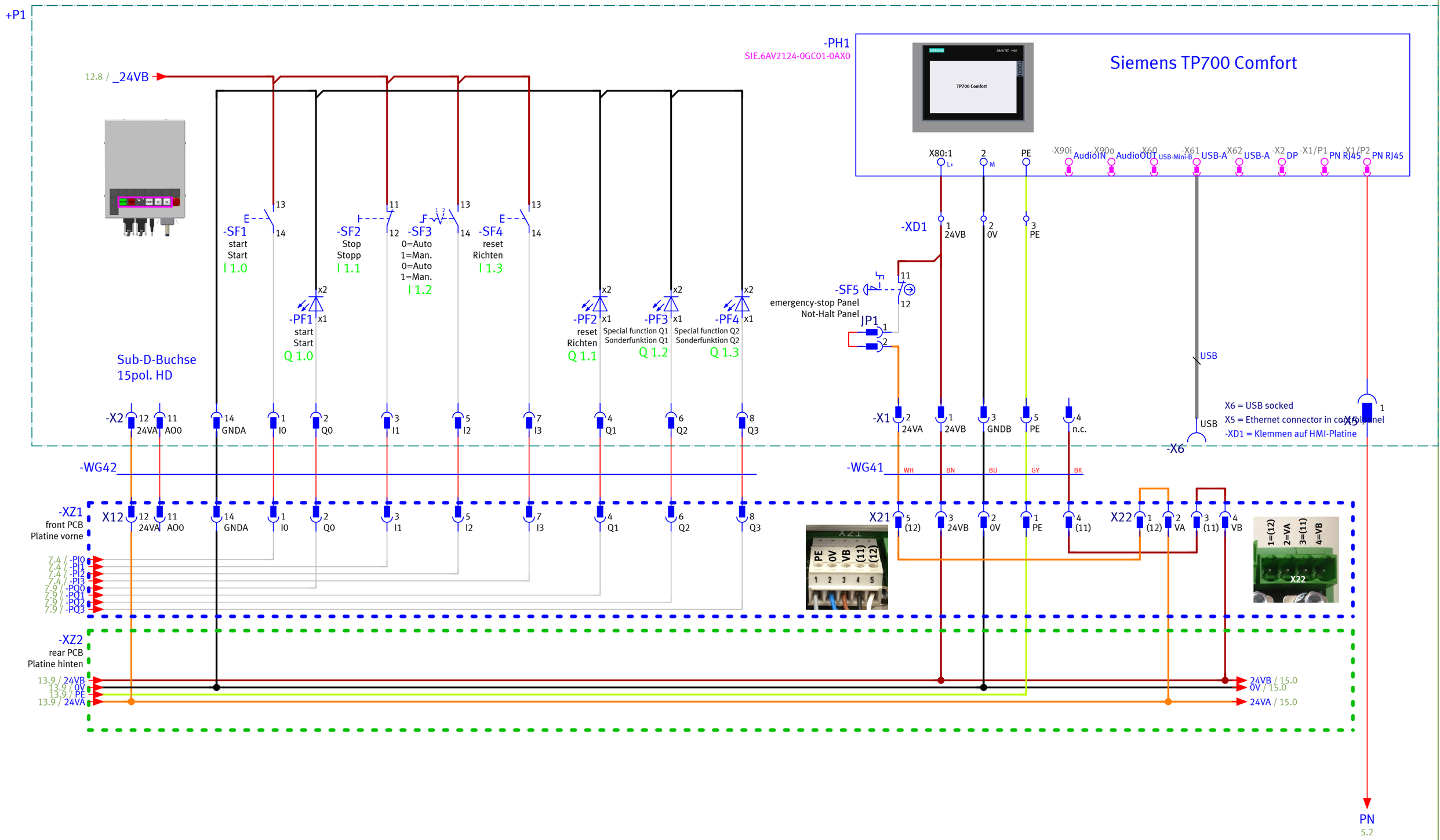

Date	22.03.2017	Festo Didactic SE Rechbergstraße 3 D-73770 Denkendorf	FESTO	controlpanel basic functions & touchpanel Bedienfeld Grundfunktionen & Touchpanel	S-Nr.
Ed. by.	ESPE				= S7M6T7 CP Lab S7-1512SP, HMI TP700,
Creat.	ESPE				PSP / DPJ VN ++
Drw.No.		N:Raster08 F: WUP0U30238 J:\P8\Projekte\Festo\24 CP-Lab\V3\CP Lab V3 2017-03-22.elk 2.4.4			+

This Drawing is copyright by Festo Didactic SE Diese Zeichnung ist Eigentum der Festo Didactic SE

Date	22.03.2017	Festo Didactic SE Rechbergstraße 3 D-73770 Denkendorf	FESTO	controlpanel options Bedienfeld Optionen	S-Nr.
Ed. by.	ESPE				= S7M6T7 CP Lab S7-1512SP, HMI TP700,
Creat.	ESPE				PSP / DPJ VN ++ Page 15
Drw.No.		N:Raster08 F: WUP0U30238 J:\P8\Projekte\Festo\24 CP-Lab\V3\CP Lab V3 2017-03-22.elk 2.4.4			+ of 17

This Drawing is copyright by Festo Didactic SE Diese Zeichnung ist Eigentum der Festo Didactic SE

CPU CPU	Placement Platzierung	assembly Baugruppe	Page Seite	Address Adresse	data type symbol Datentyp	Symbol	function text Funktionstext
CPU1	2	=S7M6T7+-KF2:1	/6.2	I 0.0	BOOL	-XG2:1	
CPU1	2	=S7M6T7+-KF2:2	/6.2	I 0.1	BOOL	-XG2:2	
CPU1	2	=S7M6T7+-KF2:3	/6.2	I 0.2	BOOL	-XG2:3	
CPU1	2	=S7M6T7+-KF2:4	/6.2	I 0.3	BOOL	-XG2:4	
CPU1	2	=S7M6T7+-KF2:5	/6.2	I 0.4	BOOL	-XG2:5	
CPU1	2	=S7M6T7+-KF2:6	/6.3	I 0.5	BOOL	-XG2:6	
CPU1	2	=S7M6T7+-KF2:7	/6.3	I 0.6	BOOL	-XG2:7	
CPU1	2	=S7M6T7+-KF2:8	/6.3	I 0.7	BOOL	-XG2:8	
CPU1	2	=S7M6T7+-KF2:M	/6.3				
CPU1	2	=S7M6T7+-KF2:P24V	/6.1				
CPU1	3	=S7M6T7+-KF3:1	/7.2	I 1.0	BOOL	+P1-SF1	start Start
CPU1	3	=S7M6T7+-KF3:2	/7.2	I 1.1	BOOL	+P1-SF2	Stop Stopp
CPU1	3	=S7M6T7+-KF3:3	/7.2	I 1.2	BOOL	+P1-SF3	0=Auto 1=Man. 0=Auto 1=Man.
CPU1	3	=S7M6T7+-KF3:4	/7.2	I 1.3	BOOL	+P1-SF4	reset Richten
CPU1	3	=S7M6T7+-KF3:5	/7.2	I 1.4	BOOL	-BG1	Identcode Bit 0 Identcode Bit 0
CPU1	3	=S7M6T7+-KF3:6	/7.3	I 1.5	BOOL	-24VA	Emergency-Stop enabled Not-Halt freigegeben
CPU1	3	=S7M6T7+-KF3:7	/7.3	I 1.6	BOOL	-BG5	Pallet at left end Palette an Bandende links
CPU1	3	=S7M6T7+-KF3:8	/7.3	I 1.7	BOOL	-BG6	Pallet at right end Palette an Bandende rechts
CPU1	3	=S7M6T7+-KF3:M	/7.3				
CPU1	3	=S7M6T7+-KF3:P24V	/7.1				
CPU1	4	=S7M6T7+-KF4:1	/6.6	Q 0.0	BOOL	-XG4:1	
CPU1	4	=S7M6T7+-KF4:2	/6.6	Q 0.1	BOOL	-XG4:2	
CPU1	4	=S7M6T7+-KF4:3	/6.7	Q 0.2	BOOL	-XG4:3	
CPU1	4	=S7M6T7+-KF4:4	/6.7	Q 0.3	BOOL	-XG4:4	
CPU1	4	=S7M6T7+-KF4:5	/6.7	Q 0.4	BOOL	-XG4:5	
CPU1	4	=S7M6T7+-KF4:6	/6.7	Q 0.5	BOOL	-XG4:6	
CPU1	4	=S7M6T7+-KF4:7	/6.7	Q 0.6	BOOL	-XG4:7	
CPU1	4	=S7M6T7+-KF4:8	/6.8	Q 0.7	BOOL	-XG4:8	
CPU1	4	=S7M6T7+-KF4:M	/6.8				
CPU1	4	=S7M6T7+-KF4:P24V	/6.6				
CPU1	5	=S7M6T7+-KF5:1	/7.6	Q 1.0	BOOL	+P1-PF1	start Start
CPU1	5	=S7M6T7+-KF5:2	/7.6	Q 1.1	BOOL	+P1-PF2	reset Richten
CPU1	5	=S7M6T7+-KF5:3	/7.7	Q 1.2	BOOL	+P1-PF3	Special function Q1 Sonderfunktion Q1
CPU1	5	=S7M6T7+-KF5:4	/7.7	Q 1.3	BOOL	+P1-PF4	Special function Q2 Sonderfunktion Q2
CPU1	5	=S7M6T7+-KF5:5	/7.7	Q 1.4	BOOL	-XZ2-X6:27	Motor Rechtslauf
CPU1	5	=S7M6T7+-KF5:6	/7.7	Q 1.5	BOOL	-XZ2-X6:28	Motor Linkslauf
CPU1	5	=S7M6T7+-KF5:7	/7.7	Q 1.6	BOOL	-XZ2-X6:29	transport slow speed Bandantrieb Schleichgang
CPU1	5	=S7M6T7+-KF5:8	/7.8	Q 1.7	BOOL	-QM1-MB1	open Stopper Stopper öffnen
CPU1	5	=S7M6T7+-KF5:M	/7.8				
CPU1	5	=S7M6T7+-KF5:P24V	/7.6				
CPU1	6	=S7M6T7+-KF6:1	/9.1	%ID 10	QWORD	-XTF1:4	IO-Link Port 1: RFID-Reader
CPU1	6	=S7M6T7+-KF6:2	/9.1	%ID 18	QWORD	-XZ2-S3	IO-Link Port 2: DA-Link-Interface
CPU1	6	=S7M6T7+-KF6:3	/9.2	%ID 26	QWORD	-XG6:3	IO-Link Port 3: frei
CPU1	6	=S7M6T7+-KF6:4	/9.3	%ID 34	QWORD	-XG6:4	IO-Link Port 4: frei
CPU1	6	=S7M6T7+-KF6:9	/9.0				
CPU1	6	=S7M6T7+-KF6:10	/9.1				
CPU1	6	=S7M6T7+-KF6:11	/9.2				
CPU1	6	=S7M6T7+-KF6:12	/9.2				
CPU1	6	=S7M6T7+-KF6:13	/9.0				
CPU1	6	=S7M6T7+-KF6:14	/9.1				
CPU1	6	=S7M6T7+-KF6:15	/9.2				
CPU1	6	=S7M6T7+-KF6:16	/9.2				

CPU CPU	Placement Platzierung	assembly Baugruppe	Page Seite	Address Adresse	data type symbol Datentyp	Symbol	function text Funktionstext
CPU1	0	=S7M6T7+-KF21:A1	/10.2	I18.0	BOOL	-BG1	Identcode Bit 0 Identcode Bit 0
CPU1	0	=S7M6T7+-KF21:A2	/10.6	Q18.0	BOOL	-XZ2-X6:19	Reserve Reserve
CPU1	0	=S7M6T7+-KF21:A3	/10.2	I18.1	BOOL	-BG2	Identcode Bit 1 Identcode Bit 1
CPU1	0	=S7M6T7+-KF21:A4	/10.6	Q18.1	BOOL	-XZ2-X6:20	Reserve Reserve
CPU1	0	=S7M6T7+-KF21:A5	/10.2	I18.2	BOOL	-BG3	Identcode Bit 2 Identcode Bit 2
CPU1	0	=S7M6T7+-KF21:A6	/10.7	Q18.2	BOOL	-XZ2-X6:21	Reserve Reserve
CPU1	0	=S7M6T7+-KF21:A7	/10.2	I18.3	BOOL	-BG4	Identcode Bit 3 Identcode Bit 3
CPU1	0	=S7M6T7+-KF21:A8	/10.7	Q18.3	BOOL	-XZ2-X6:22	Reserve Reserve
CPU1	0	=S7M6T7+-KF21:A9	/12.1	IW19	WORD	-XZ2-X5:8	
CPU1	0	=S7M6T7+-KF21:A10	/12.3	IB21	BYTE	+P1-RA1	Potentiometer 1 Potentiometer 1
CPU1	0	=S7M6T7+-KF21:A11	/12.2	QW19	WORD	+P1-X2:9	
CPU1	0	=S7M6T7+-KF21:A12	/10.6				
CPU1	0	=S7M6T7+-KF21:A13	/10.1				
CPU1	0	=S7M6T7+-KF21:A14	/10.7				
CPU1	0	=S7M6T7+-KF21:A15	/10.3				
CPU1	0	=S7M6T7+-KF21:B1	/11.2	I18.4	BOOL	-KG1	coupling receiver right (n.c.) Koppelsensor Empfänger rechts (Öffner)
CPU1	0	=S7M6T7+-KF21:B2	/11.6	Q18.4	BOOL	-GF1	coupling sender left Koppelsensor Sender links
CPU1	0	=S7M6T7+-KF21:B3	/11.2	I18.5	BOOL	-KG2	coupling receiver left (n.c.) Koppelsensor Empfänger links (Öffner)
CPU1	0	=S7M6T7+-KF21:B4	/11.6	Q18.5	BOOL	-GF2	coupling sender right Koppelsensor Sender rechts
CPU1	0	=S7M6T7+-KF21:B5	/11.2	I18.6	BOOL	-XZ2-X6:7	
CPU1	0	=S7M6T7+-KF21:B6	/11.7	Q18.6	BOOL	-XZ2-X6:25	
CPU1	0	=S7M6T7+-KF21:B7	/11.2	I18.7	BOOL	-BG9	Stopper opened Stopper geöffnet
CPU1	0	=S7M6T7+-KF21:B8	/11.7	Q18.7	BOOL	-XZ2-X6:26	
CPU1	0	=S7M6T7+-KF21:B9	/12.1	IW22	WORD	-XZ2-X5:7	
CPU1	0	=S7M6T7+-KF21:B10	/12.3	IB24	BYTE	+P1-RA2	Potentiometer 2 Potentiometer 2
CPU1	0	=S7M6T7+-KF21:B11	/12.2	QW21	WORD	-XZ2-X5:1	
CPU1	0	=S7M6T7+-KF21:B12	/11.6				
CPU1	0	=S7M6T7+-KF21:B13	/11.1				
CPU1	0	=S7M6T7+-KF21:B14	/11.7				
CPU1	0	=S7M6T7+-KF21:B15	/11.3				
CPU1	0	=S7M6T7+-KF21:1	/9.8				
CPU1	0	=S7M6T7+-KF21:2	/9.9				
CPU1	0	=S7M6T7+-KF21:3	/9.8				
CPU1	0	=S7M6T7+-KF21:4	/9.9				
CPU1	0	=S7M6T7+-KF21:5	/9.9				

Date	17.03.2017	Festo Didactic SE Rechbergstraße 3 D-73770 Denkendorf	PLC Overview SPS Übersicht	S-Nr.
Ed. by.	ESPE			PSP / DPJ VN
Creat.	ESPE			
Drw.No.		N:Raster08 F: WUP0U30238 J:\P8\Projekte\Festo\24 CP-Lab\V3\CP Lab V3 2017-03-22.elk 2.4.4		

= S7M6T7 CP Lab S7-1512SP, HMI TP700,
++
+

This Drawing is copyright by Festo Didactic SE Diese Zeichnung ist Eigentum der Festo Didactic SE

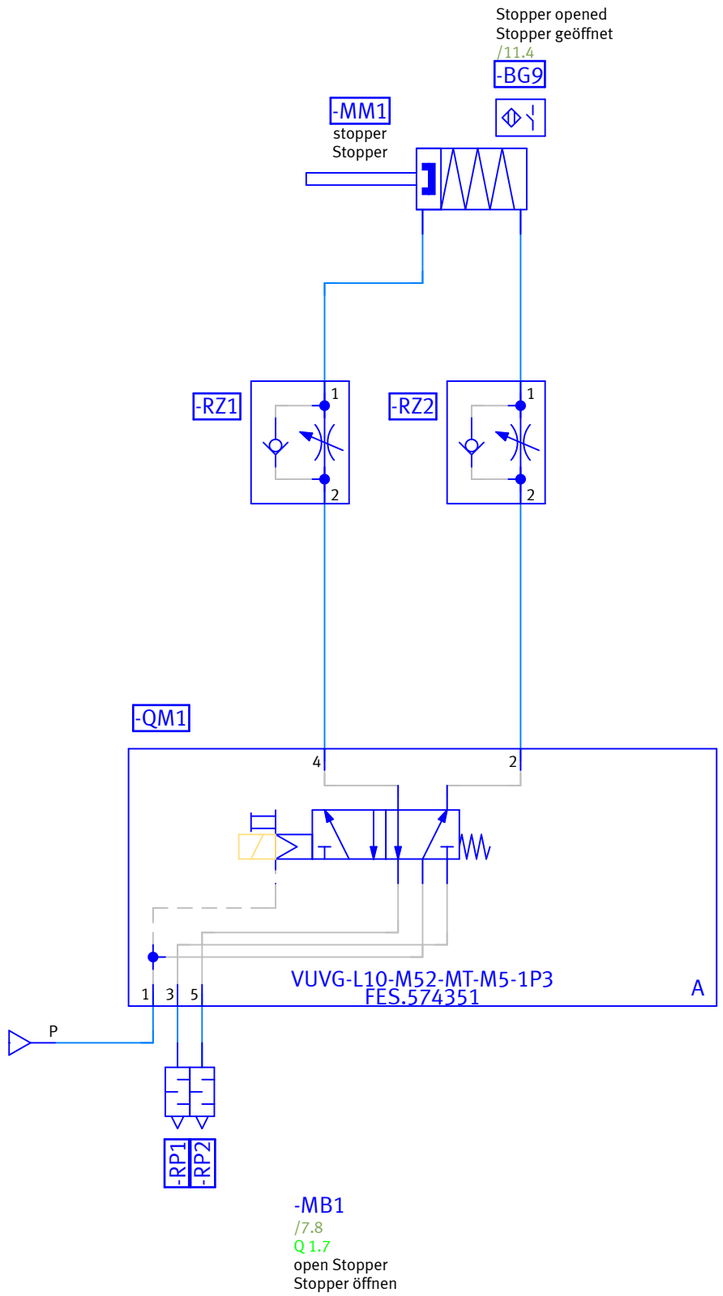

Date	22.03.2017	Festo Didactic SE Rechbergstraße 3 D-73770 Denkendorf	FESTO	pneumatic schematic Pneumatikplan	S-Nr.
Ed. by.	ESPE				= S7M6T7 CP Lab S7-1512SP, HMI TP700,
Creat.	ESPE				PSP / DPJ VN ++ Page 17
Drw.No.		N:Raster08 F: WUP0U30238 J:\P8\Projekte\Festo\24 CP-Lab\V3\CP Lab V3 2017-03-22.elk 2.4.4			+ of 17